DE1294 GLASS FLIPPER

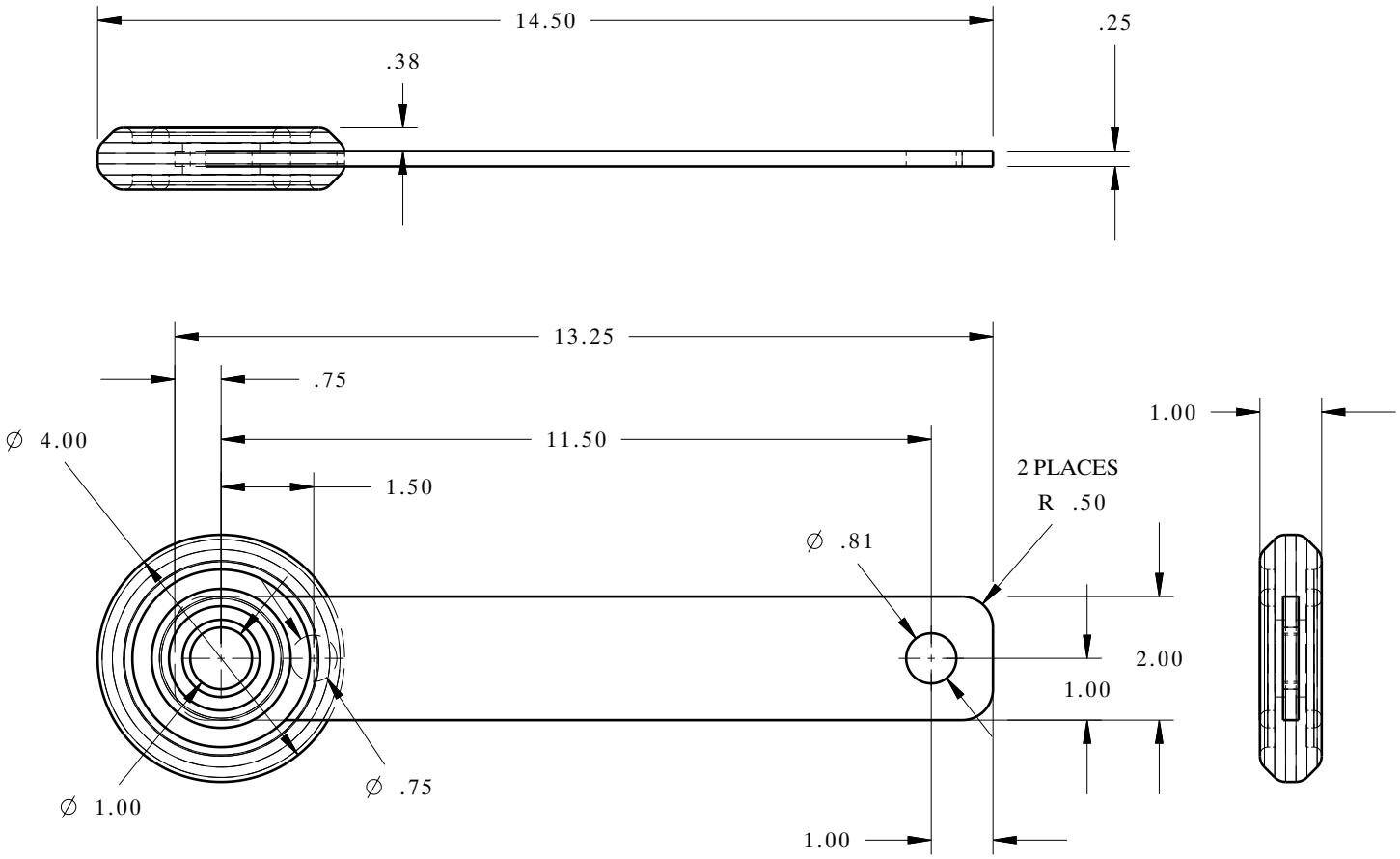

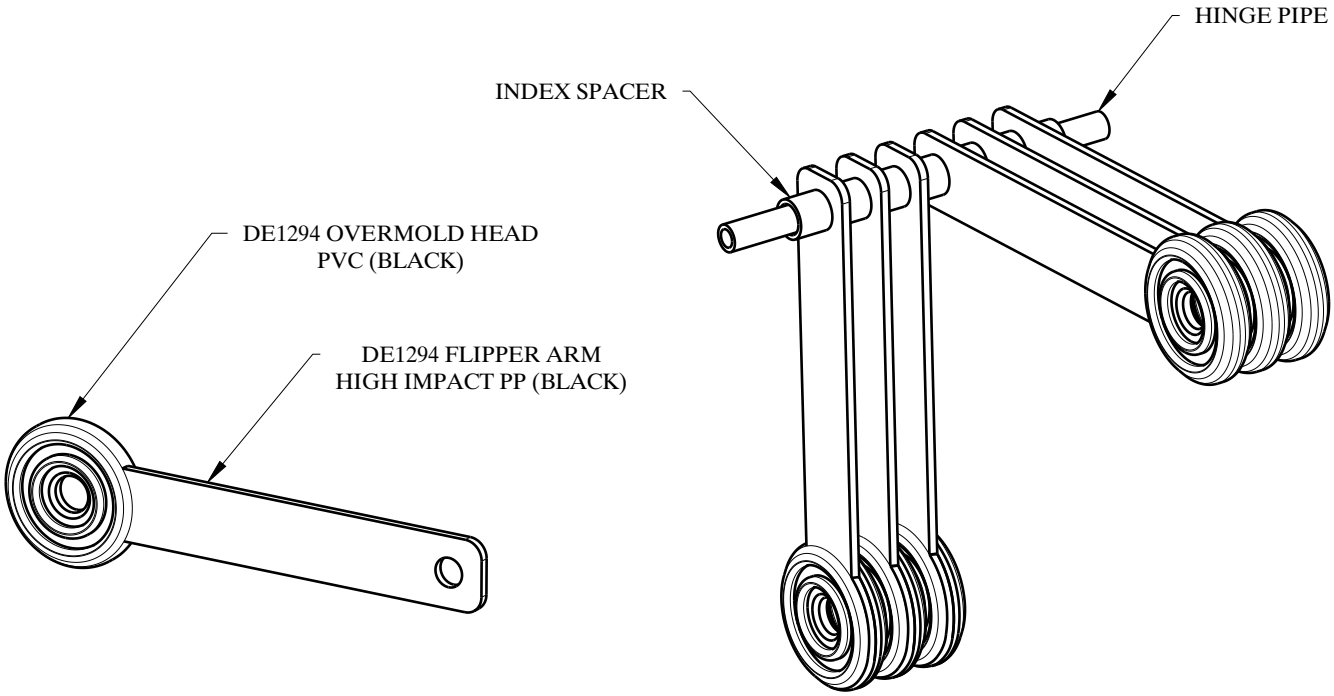

MATERIAL TYPE **High Impact PP (Arm) PVC (Overmold)**	**DE1294 GLASS FLIPPER**	Dunnage Engineering
HARDNESS (SHORE A) **85A (Overmold)**	**Applications:** **-Glass Separation**	
COLOR **Black**		**800-443-5553** **www.dunnage-eng.com**